Electrolux 900 thermaline

El. deep fat fryer 2X9LT

The Electrolux 900-Thermaline of cooking equipment is designed for the very heavy duty requirements of hotels, institutions, hospitals, central kitchens, in-flight kitchens and cruise ships. The series consist of a wide choice of modular elements that can be installed as individual, free-standing units or assembled into a complete cooking suite made virtually seamless by means of cleverly-designed connecting rails.
The models detailed on this sheet are designed for deep fat frying of fish, vegetables and meat in hot oil. Each model has twin, independently controlled wells and is freestanding on a base unit. Installation options are floor mounted on 100 or 200 mm high feet or a plinth which can be either steel or masonry construction.

591806 - with accessories

EASY TO USE
• Designed for deep fat frying of meat, fish, specialities and vegetable (pommes frites, chips) in hot oil.
• Choice of one or two wells which can be used independantly.
• An oil drain tap, drain vessel and an oil filter system is located in the base of the unit which is enclosed by a door.
• Expansion zone at the top of each well.
• Frying basket sits on a perforated sheet above the heating element.
• Indicating lamps for mains on and oil temperature.
• Oil temperature is regulated stepless between 135°C and 200°C by a thermostat.
• Reduced power setting to melt solid fat.
• Short heating-up time (from 20 to 180°C approximately 3 minutes) and minimum temperature drop after immersion of food thanks to high inherent performance.
• Control thermostat for highly accurate and consistent working temperatures.
• Deep oil sump with generously dimensioned cold zone for the collection of frying residues.
• Oil level mark for MAX/MIN filling.
• All appliances conform to ruling European safety and hygiene standards and are CE marked.
• All models are type-approved by an international standards authority and are certified.

EASY TO MAINTAIN
• Stainless steel heating register that folds out of the bath with self-locking stop system ensures easy access and cleaning.
• Oil can be drained off via a ball-valve which can be locked to prevent unintentional opening. When open, the ball valve provides a full cross-section aperture for easy cleaning of the drainage system.
• Easy to clean deep drawn well with rounded corners.
• Body, cupboard and support are made of AISI 304 stainless steel.
• No gaps or dirt traps between adjoining appliances when connecting rails are fitted.

CE Electrolux thermaline

Pdf downloaded from http://www.thepdfportal.com/ceia010_24222.pdf

• All major components may be easily accessed from the front.
• The appliances are IP X5 certified against water jets.

EASY ON THE ENVIRONMENT
• 98% recyclable by weight.
• Packing free of toxic substances.

TECHNICAL DATA	**HLE159159W 580504**	**LE159159 591806**	**HLE159159 591816**
Power supply	Electric	Electric	Electric
External dimensions - mm			
width	500	500	500
depth	900	900	900
height	700	800	700
N° of wells	2	2	2
Usable well dimensions - mm			
width	180	180	180
depth	320	320	320
height	230	230	230
Thermostatic	●	●	●
Maximum Well Capacity -lt	8.6, 9.4	8.6, 9.4	8.6, 9.4
Power - kW			
installed-electric	22	22	22
Net weight - kg.	120	120	120
Supply voltage	400 V, 3N, 50/60	400 V, 3N, 50/60	400 V, 3N, 50/60
INCLUDED ACCESSORIES			
1X9 LT BASKET FOR DEEP FRYER 900MM	2	2	2
DISCHARGE CONTAINER FOR 9LT DEEP FRYER	2	2	2
LID FOR 18LT DEEP FRYER	1	1	1
STRAINER FOR 9LT DEEP FRYER	2	2	2
ACCESSORIES			
BOTTOM PL+4 FEET 100MM-800&900MM-SPECIAL		911927	
BOTTOM PL+4 FEET 200MM-800&900MM-SPECIAL			911928
C-BOARD WELDED 500 MM	911738	911738	911738
FOLDING SHELF 300X900 MM	910803	910803	910803
FOLDING SHELF 400X900 MM	910804	910804	910804
S/S PLINTH 500X900X100MM - AGAINST WALL		911170	
S/S PLINTH 500X900X100MM - FREESTANDING		911149	
S/S PLINTH 500X900X200MM - AGAINST WALL			911207
S/S PLINTH 500X900X200MM - FREESTANDING			911190

Pdf downloaded from http://www.thepdfportal.com/ceia010_24222.pdf

Electrolux 900 thermaline
El. deep fat fryer 2X9LT

580504

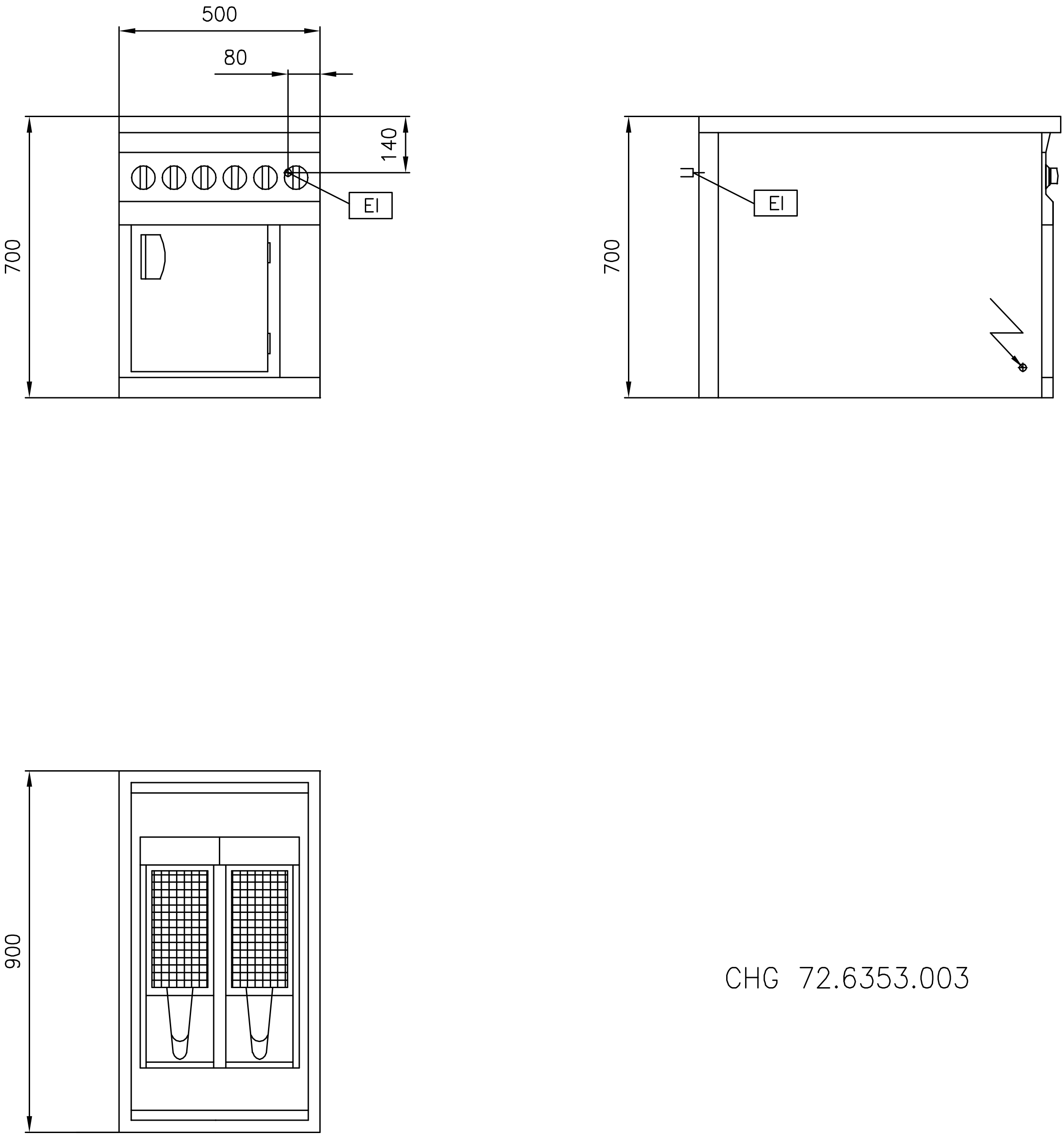

CEIA010

2013-10-02

LEGEND	HLE159159W 580504
EI - Electrical connection	400 V, 3N, 50/60

Subject to change without notice

Pdf downloaded from http://www.thepdfportal.com/ceia010_24222.pdf

Electrolux 900 thermaline
El. deep fat fryer 2X9LT

591806

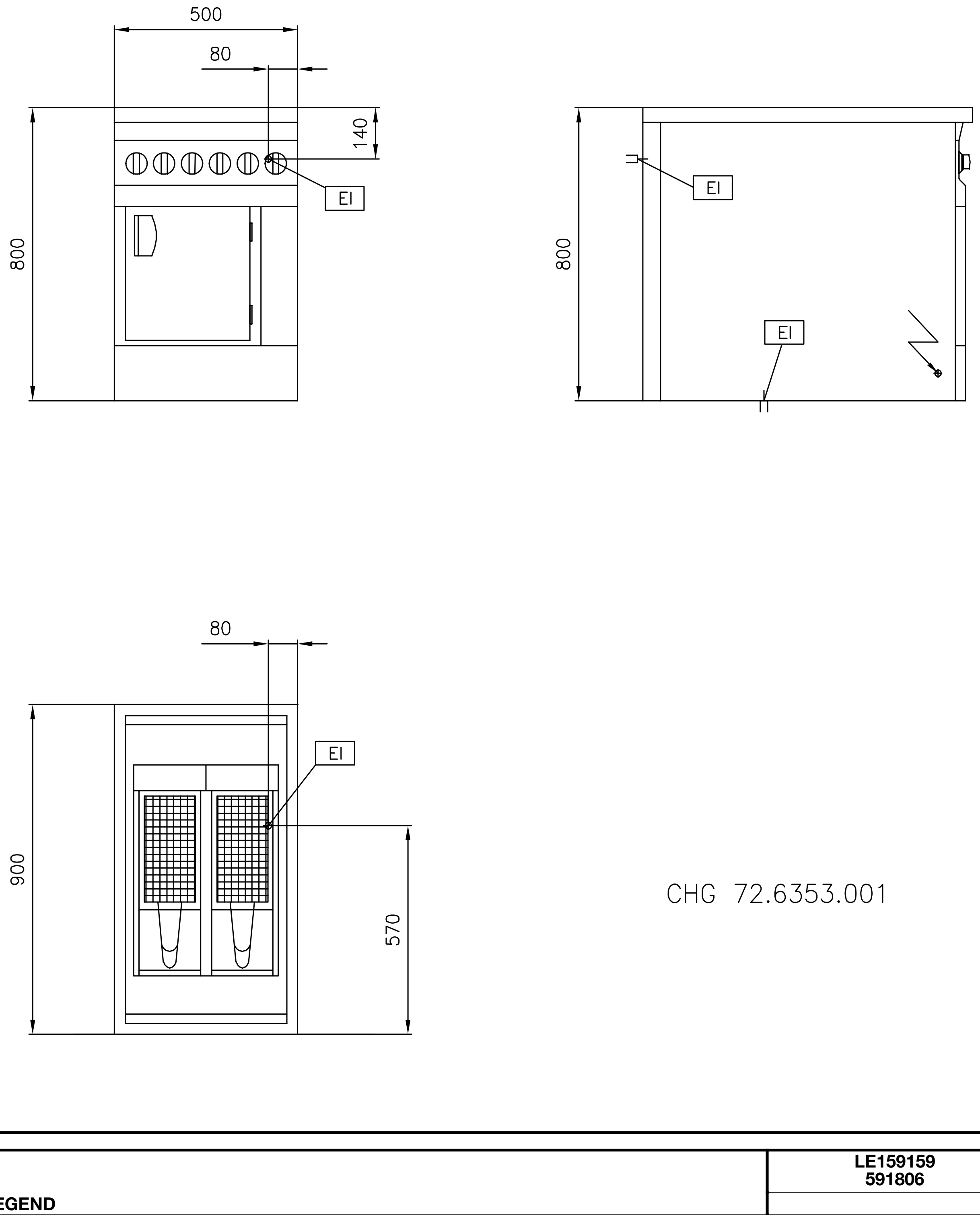

	LE159159 **591806**
LEGEND	
EI - Electrical connection	400 V, 3N, 50/60

CEIA010

2013-10-02

Subject to change without notice

Internet: http://www.electrolux.com/foodservice

Pdf downloaded from http://www.thepdfportal.com/ceia010_24222.pdf

Electrolux 900 thermaline
El. deep fat fryer 2X9LT

591816

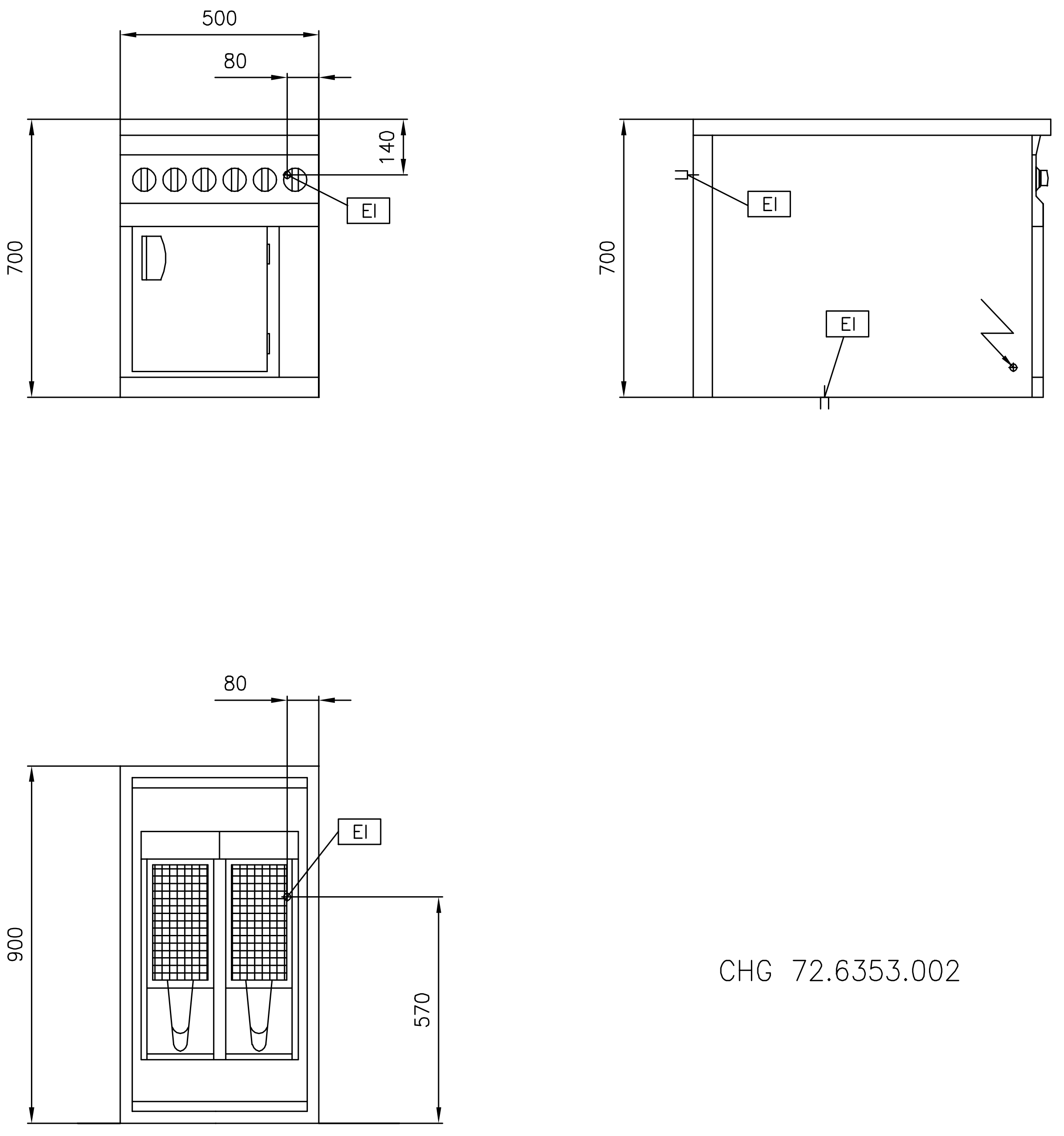

	HLE159159 **591816**
LEGEND	
EI - Electrical connection	400 V, 3N, 50/60

CEIA010

2013-10-02

Subject to change without notice

Pdf downloaded from http://www.thepdfportal.com/ceia010_24222.pdf